Über die gesetzliche Gewährleistung hinausgehende Garantieangaben sind Herstellergarantien.

15W Ultra Slim Step Shape DIN Rail

HDR-15 series

LPS UL508 UL60950-1 EN61558 IEC60950-1 R33100 RoHS

ECO Household Automate Industrial Security Network Telecom

Features

- Ultra slim design with 17.5mm(1SU) width
- Universal input 85~264VAC(277VAC operational)
- No load power consumption<0.3W
- Isolation class Ⅱ
- Pass LPS (Limited power source)
- DC output voltage adjustable
- Protections : Short circuit / Overload / Over voltage
- Cooling by free air convection (working temperature:-30~+70°C)
- DIN rail TS-35/7.5 or 15 mountable
- Over voltage category Ⅲ
- LED indicator for power on
- 3 years warranty

Applications

- Household control system
- Building automation
- Industrial control system
- Factory automation
- Electro-mechanical apparatus

Description

HDR-15 is one economical ultra slim 15W DIN rail power supply series, adapt to be installed on TS-35/7.5 or TS-35/15 mounting rails. The body is designed 17.5mm(1SU) in width, which allows space saving inside the cabinets. The entire series adopts the full range AC input from 85VAC to 264VAC(277VAC operational) and conforms to EN61000-3-2, the norm the European Union regulates for harmonic current.

HDR-15 is designed with plastic housing that it can effectively prevent user from electric hazards. With working efficiency up to 87%, the entire series can operate at the ambient temperature between -30℃ and 70℃ under air convection. It is equipped with constant current mode for overload protection, fitting various inductive or capacitive applications. The complete protection functions and relevant certificates for home automations and industrial control apparatus (IEC60950-1, UL508, UL60950-1, EN61558-2-16) make HDR-15 a very competitive power supply solution for household and industrial applications.

Model Encoding

HDR - 15 - 12

- 12 — Output voltage
- 15 — Rated wattage
- HDR — Series name

Über die gesetzliche Gewährleistung hinausgehende Garantieangaben sind Herstellergarantien.

MEAN WELL

15W Ultra Slim Step Shape DIN Rail

HDR-15 series

SPECIFICATION

MODEL		HDR-15-5	HDR-15-12	HDR-15-15	HDR-15-24	HDR-15-48
OUTPUT	DC VOLTAGE	5V	12V	15V	24V	48V
	RATED CURRENT	2.4A	1.25A	1A	0.63A	0.32A
	CURRENT RANGE	0 ~ 2.4A	0 ~ 1.25A	0 ~ 1A	0 ~ 0.63A	0 ~ 0.32A
	RATED POWER	12W	15W	15W	15.2W	15.4W
	RIPPLE & NOISE (max.) Note.2	80mVp-p	120mVp-p	120mVp-p	150mVp-p	240mVp-p
	VOLTAGE ADJ. RANGE	4.5 ~ 5.5V	10.8 ~ 13.8V	13.5 ~ 18V	21.6 ~ 29V	43.2 ~ 55.2V
	VOLTAGE TOLERANCE Note.3	±2.0%	±1.0%	±1.0%	±1.0%	±1.0%
	LINE REGULATION	±1.0%	±1.0%	±1.0%	±1.0%	±1.0%
	LOAD REGULATION	±1.0%	±1.0%	±1.0%	±1.0%	±1.0%
	SETUP, RISE TIME	2000ms, 80ms/230VAC 2000ms, 80ms/115VAC at full load				
	HOLD UP TIME (Typ.)	30ms/230VAC 12ms/115VAC at full load				
INPUT	VOLTAGE RANGE	85 ~ 264VAC (277VAC operational) 120 ~ 370VDC (390VDC operational)				
	FREQUENCY RANGE	47 ~ 63Hz				
	EFFICIENCY (Typ.)	80%	85%	85.5%	86%	87%
	AC CURRENT (Typ.)	0.5A/115VAC 0.25A/230VAC				
	INRUSH CURRENT (Typ.)	COLD START 25A/115VAC 45A/230VAC				
PROTECTION	OVERLOAD Note.4	110 ~ 145% rated output power				
		Protection type : Constant current limiting, recovers automatically after fault condition is removed				
	OVER VOLTAGE	5.75 ~ 6.75V	14.2 ~ 16.2V	18.8 ~ 22.5V	30 ~ 36V	56.5~ 64.8V
		Protection type : Shut off o/p voltage, clamping by zener diode				
ENVIRONMENT	WORKING TEMP.	-30 ~ +70℃ (Refer to "Derating Curve")				
	WORKING HUMIDITY	20 ~ 90% RH non-condensing				
	STORAGE TEMP., HUMIDITY	-40 ~ +85℃, 10 ~ 95% RH non-condensing				
	TEMP. COEFFICIENT	±0.03%/℃ (0 ~ 50℃) RH non-condensing				
	VIBRATION	10 ~ 500Hz, 2G 10min./1cycle, period for 60min. each along X, Y, Z axes; Mounting: Compliance to IEC60068-2-6				
	OPERATING ALTITUDE	2000 meters				
	OVER VOLTAGE CATEGORY	Ⅲ ; According to EN61558, EN50178,EN60664-1, EN62477-1 ; altitude up to 2000 meters				
SAFETY & EMC (Note 5)	SAFETY STANDARDS	UL60950-1, UL508, TUV EN61558-2-16, IEC60950-1, EAC TP TC 004, BSMI CNS14336-1 approved; Design refer to TUV EN60950-1				
	WITHSTAND VOLTAGE	I/P-O/P:4KVAC				
	ISOLATION RESISTANCE	I/P-O/P:100M Ohms / 500VDC / 25℃/ 70% RH				
	EMC EMISSION	Parameter	Standard	Test Level / Note		
		Conducted	EN55032(CISPR32), CNS13438	Class B		
		Radiated	EN55032(CISPR32), CNS13438	Class B		
		Harmonic Current	EN61000-3-2	Class A		
		Voltage Flicker	EN61000-3-3	-------		
	EMC IMMUNITY	EN55024, EN55035, EN61000-6-2, EN61204-3				
		Parameter	Standard	Test Level /Note		
		ESD	EN61000-4-2	Level 3, 8KV air; Level 2, 4KV contact, criteria A		
		Radiated Susceptibility	EN61000-4-3	Level 3, criteria A		
		EFT/Burest	EN61000-4-4	Level 3, criteria A		
		Surge	EN61000-4-5	Level 4,2KV/L-N, criteria A		
		Conducted	EN61000-4-6	Level 3, criteria A		
		Magnetic Field	EN61000-4-8	Level 4, criteria A		
		Voltage Dips and interruptions	EN61000-4-11	>95% dip 0. 5 periods, 30% dip 25 periods, >95% interruptions 250 periods		
OTHERS	MTBF	1166K hrs min. MIL-HDBK-217F (25℃)				
	DIMENSION	17.5*90*54.5mm (W*H*D)				
	PACKING	78g;160pcs/13.5Kg/1.19CUFT				

NOTE

1. All parameters NOT specially mentioned are measured at 230VAC input, rated load and 25℃ of ambient temperature.
2. Ripple & noise are measured at 20MHz of bandwidth by using a 12" twisted pair-wire terminated with a 0.1μf & 47μf parallel capacitor.
3. Tolerance : includes set up tolerance, line regulation and load regulation.
4. Constant current limiting operation within 50% ~100% rated output voltage; protection type for short ciruit is hiccup mode,it will recover automatically after fault condition is removed.
5. The power supply is considered as an independent unit, but the final equipment still need to re-confirm that the whole system complies with the EMC directives. For guidance on how to perform these EMC tests, please refer to "EMI testing of component power supplies." (as available on http://www.meanwell.com)
6. The ambient temperature derating of 3.5℃/1000m with fanless models and of 5℃/1000m with fan models for operating altitude higher than 2000m(6500ft).

Über die gesetzliche Gewährleistung hinausgehende Garantieangaben sind Herstellergarantien.

■ Block Diagram

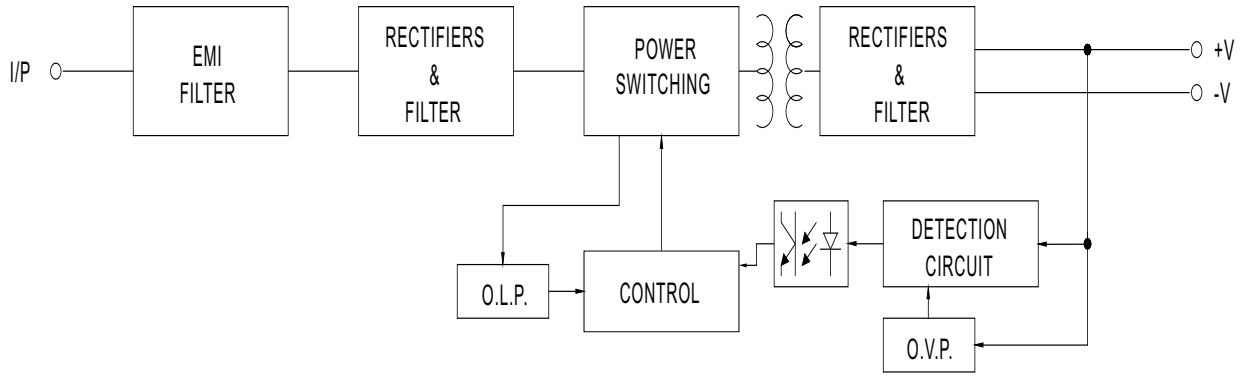

■ Derating Curve

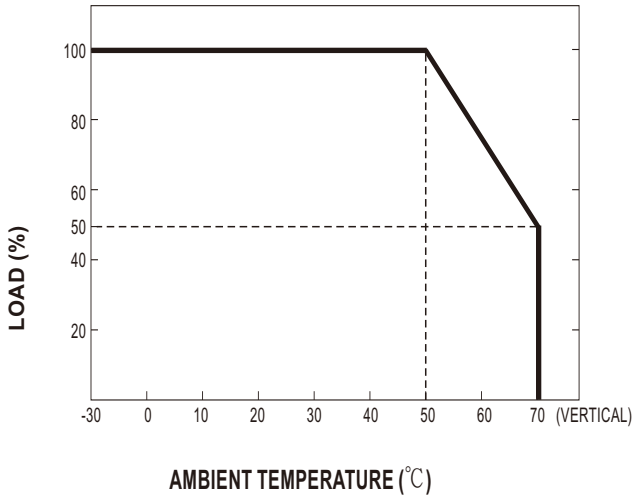

■ Output Derating VS Input Voltage

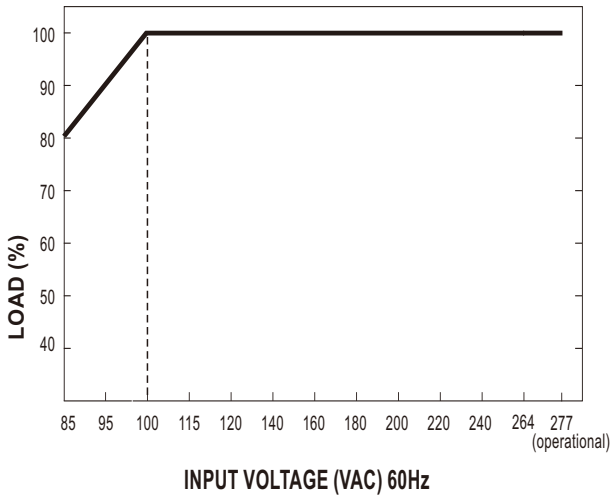

Über die gesetzliche Gewährleistung hinausgehende Garantieangaben sind Herstellergarantien.

Mechanical Specification

(Unit: mm , tolerance ± 0.5mm)

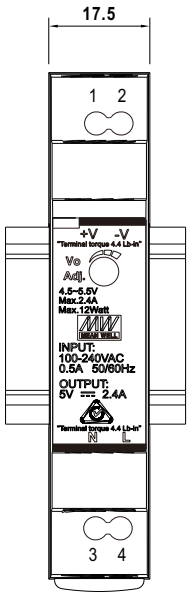

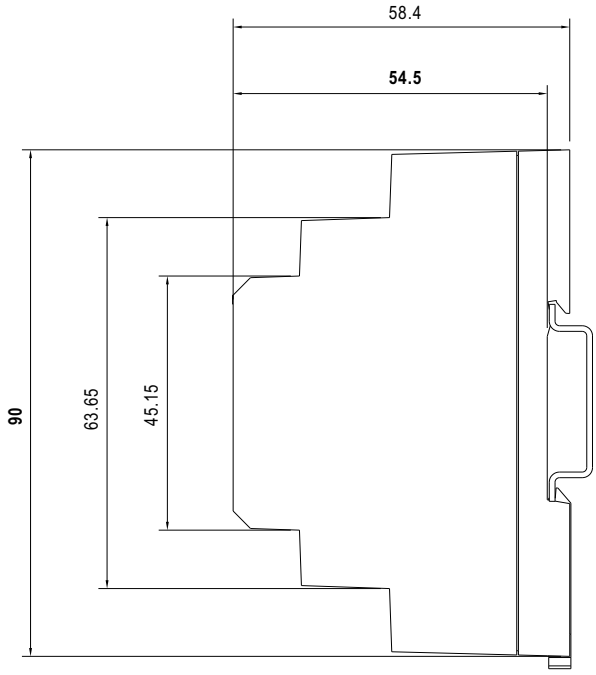

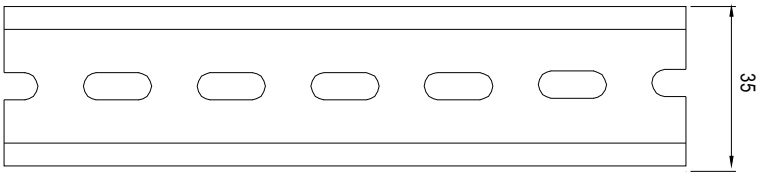

ADMISSIBLE DIN-RAIL:TS35/7.5 OR TS35/15

Terminal Pin No. Assignment

Pin No.	Assignment	Pin No.	Assignment
1	+V	3	AC/N
2	-V	4	AC/L

Installation Manual

Please refer to : http://www.meanwell.com/manual.html